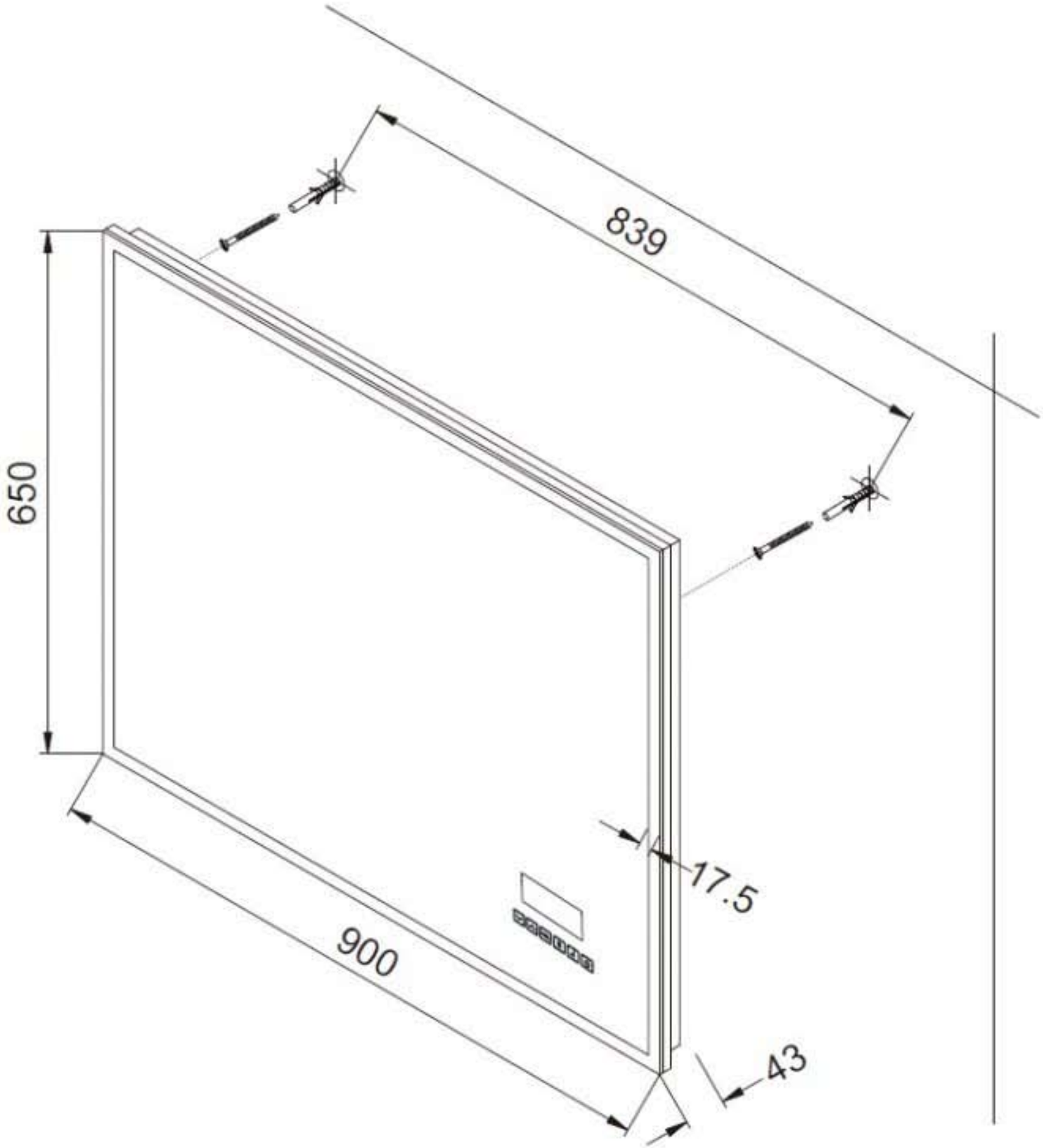
839
650
17.5
900
43