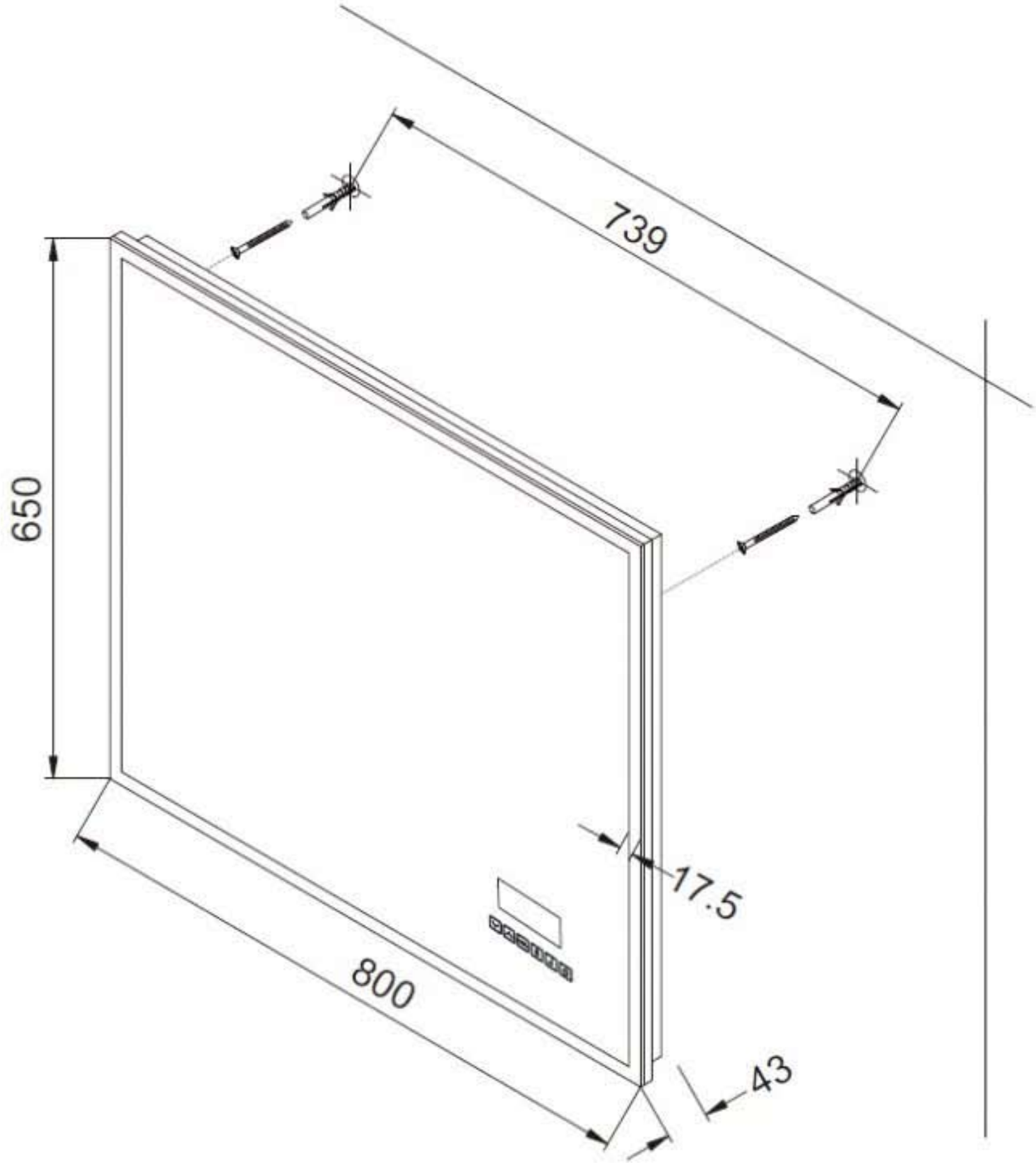
739
650
17.5
800
43